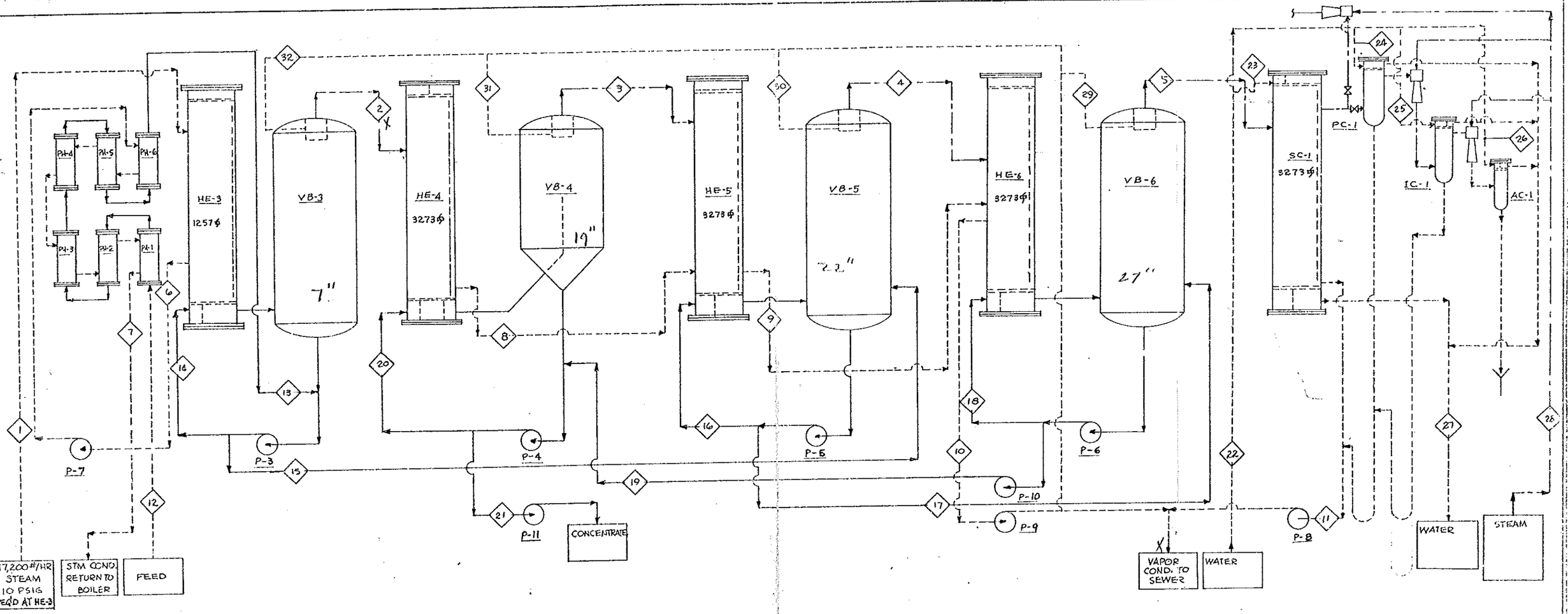

LINE SYMBOL	1	2	3	4	5	6	7	8	9	10	11	12	13	14	15	16
SERVICE	STEAM TO HE-3	N°3 VAPOR	N°4 VAPOR	N°5 VAPOR	N°6 VAPOR	COND. TO P.H.	COND. TO BOILER	N°4 VAPOR COND.	N°5 VAPOR COND.	HE-6 COND. TO SEWER	SC-1 COND. TO SEWER	FEED LIQUOR TO P.H.	LIQUOR FROM P.H.	VB-3 RECYCLE	LIQUOR FROM VB-3	VB-5 RECYCLE
FLOW #/HR	17,200	13,278	12,132	16,236	15,996	—	17,200	13,278	25,410	41,646	15,996	62,500	→		49,372	
FLOW GPM	—	—	—	—	—									650	98	1700
PRESSURE PSIA	24.7 (1)	11.3	5.59	3.72	1.51	247	—	11.3	5.59	3.72	1.51	—		—	—	—
TEMPERATURE °F	—	139	107	150	116	238	130	139	167	150	116	120	153	199	199	150
TOTAL SOLIDS	—	—	—	—	—	0.0%	0.0%	50 PPM	50 PPM	50 PPM	50 PPM	2.8%	→	3.5%	3.5%	5.2%
SPECIFIC GRAVITY	—	—	—	—	—	1.0	1.0	1.0	1.0	1.0	1.0	1.005	→	1.009	1.009	1.01

LINE SYMBOL	17	18	19	20	21	22	23	24	25	26	27	28	29	30	31	32
SERVICE	LIQUOR FROM VB-5	VB-6 RECYCLE	LIQUOR FROM VB-6	VB-4 RECYCLE	LIQUOR OUTLET	COOLING WATER SUPPLY	COOLING WATER TO SC-1	COOLING WATER TO PC-1	COOLING WATER TO IC-1	COOLING WATER TO AC-1	COOLING WATER RETURN	STEAM TO EJECTOR	SEP. WASH TO VB-6	SEP. WASH TO VB-5	SEP. WASH TO VB-4	SEP. WASH TO VB-3
													INTERMITTENT			
FLOW #/HR	38,432		17,790		5,833							400 (2) 2,000	8	8	8	3
FLOW GPM	—	—	3.16	4,100	10	2456	2,175	90	30	20	2,456					
PRESSURE PSIA	—	116	—	—	—	—	—	—	—	—	—	164.7 (3)	1.51	3.72	5.59	11.3
TEMPERATURE °F	5.2%	9.3%	9.3%	30%	30%	0.0%	0.0%	0.0%	0.0%	0.0%	0.0%		150	150	150	150
TOTAL SOLIDS	1.01	1.04	1.04	1.15	1.15	1.0	1.0	1.0	1.0	1.0	1.0					
SPECIFIC GRAVITY																

(1) STEAM PRESSURE REQUIRED AT HE-1.
(2) 400 #/HR NORMAL
2000 #/HR START-UP
(3) STEAM PRESSURE REQUIRED AT EJECTOR NOZZLE.

CUSTOMER DATA
ANHEUSER BUSCH INC.
FAIRFIELD BREWERY
FAIRFIELD, CALIFORNIA
PROJECT N° 773
PO. N° A-2790-1015
EQUIP. N° 33-161 D.P. N° 33-124

Unitech

HOURLY PROCESS FLOW DIAGRAM
EVAPORATORS
FOR: ANHEUSER BUSCH FAIRFIELD BREWERY
UNITECH CONTRACT N° 20269

REV. NO	DATE	REMARKS
D	4/30/75	REV. LINE VALUES OF 23, 25, 26, 28, 29, 30, 31, 32 ADDED LINE REF. PH-4 & PH-5
C	2-7-75	FINAL CHECK
B	10/21	REVISED UNIT NOS.
A	8/20/74	ISSUED FOR PROGRESS.

THE UNITECH COMPANY

SCALE None | DWN | DATE 8/27/74 | CKD | T-269-1-D

DO NOT SCALE THIS DRAWING—USE DIMENSIONS ONLY

THIS DRAWING IS THE PROPERTY OF THE UNITECH COMPANY. IT IS NOT TO BE USED FOR ANY PURPOSES DETRIMENTAL TO THE INTERESTS OF THIS COMPANY AND IS SUBJECT TO RETURN UPON REQUEST.